ARTICLE NO. 78-1470

Wing Planforms for Large Military Transports

Charles E. Jobe*
Air Force Flight Dynamics Laboratory, Wright-Patterson AFB, Ohio
and
Robert M. Kulfan† and John D. Vachal‡
The Boeing Commercial Airplane Company, Seattle, Wash.

Transport aircraft, designed for long-range military missions with heavy payloads, lead to wings with high aspect ratios and very large spans. A wing-geometry/cruise-speed optimization study was made of a large cantilever-wing military transport airplane. Preliminary design and performance evaluations were also made of a strut-braced wing airplane. Initial results obtained with statistical weights indicated small performance advantages for the cantilever-wing design. Subsequent results obtained with weights derived from detailed analytical structural analyses reversed the initial conclusions. These results indicated that unusual alternative configuration concepts cannot be discarded, based on small differences predicted during conceptual design studies.

I. Introduction

INCREASES in fuel prices and aircraft ranges tend to favor larger wing-aspect ratios, to the point where structural weight penalties offset induced drag reductions. Projected advances in structural materials technology have also encouraged increased wing-aspect ratios during design studies of future transport aircraft. Thus, increasing fuel prices and projected military missions requiring long range, coupled with large, heavy military payloads, have led to conceptual aircraft designs with high aspect-ratio wings and very large spans.

Recently completed AFFDL/Boeing conceptual design studies[1-4] of long-range (10,000 n. mi.) heavy-payload (350,000 lb) strategic airlift aircraft have identified aspect ratios of 12 for conventional turbulent-flow, and 14 for laminar-flow control wings. The wing analyses were based on statistical wing-weight methods that are often used during conceptual design studies. The wing designs had spans of about 400 ft. The large spans caused concerns about wing deflections, and about the substantial extrapolation of the data base required for the wing-weight analyses.

The present study[3] quantifies these concerns, since large structural deflections could ultimately limit wing-span lengths, and thereby impose a strong indirect relationship between optimum wing-planform characteristics and the design mission requirements of future military transports. Perhaps even more stringent limits on wing span may be set by available runway and taxiway width at landlocked airports.

The development of the baseline cantilever-wing configuration is discussed in Sec. II. The strut-braced wing configuration is described in Sec. III. Section IV contains descriptions of the detailed structural analyses of the very large-span wings. Weight and performance comparisons of the strut-braced and cantilever wings are presented in Sec. V. Section VI contains the study conclusions.

Presented as Paper 78-1470 at the AIAA Aircraft Systems and Technology Conference, Los Angeles, Calif., Aug. 21-23, 1978; submitted Sept. 13, 1978; revision received Feb. 22, 1979. Copyright © American Institute of Aeronautics and Astronautics, Inc., 1978. All rights reserved.

Index categories: Configuration Design; Performance; Structural Design.

*Study Manager. Associate Fellow AIAA.
†Senior Specialist Engineer. Member AIAA.
‡Manager, Preliminary Design CTOL Aerodynamics. Member AIAA.

II. Cantilever-Wing Configuration

Design mission objectives for the study configurations included a 10,000-n. mi. range, a 350,000-lb payload, and a military takeoff field-length limit of 9000 ft. The design range represents an environment where fuel is not available en route to, or on arrival at, a Mideast deployment point. The payload and cargo-box size were determined by the desire to transport approximate weight multiples of main battle tanks, and military outsize cargo requirements. The military takeoff field-length limit permits use of a majority of available terminals with conventional runways. Additional requirements were: ability to carry cargo pallets or containers, drive-through capability, and a pressurized cargo compartment.

The reference cantilever-wing configuration shown in Fig. 1 was developed from configurations of previous studies[2,4] that met these design mission objectives. The technology level assumed a start of prototype production in 1985, first flight about 1989, and an initial operational capability after 1990. A complete definition of the assumed technology level is contained in Ref. 3. Selection of the three-bay fuselage was dictated by the design payload requirements of either three main battle tanks (high-density loading) or 75 military pallets (low-density loading). The high wing and kneeling landing gear permit a cargo-floor loading height of 84 in. The wing planform was selected for efficient long-range cruise performance, incorporating the benefits of active controls and advanced-composites structural materials. The canted "π" tail empennage arrangement is a structurally efficient design that provides drive-through and air-drop capability, while the use of active controls, together with the double-hinged rudder, results in minimum tail areas. The propulsion system consists of four 1985-technology high bypass-ratio engines located on the wing, primarily because of airplane balance requirements. Spanwise locations were set by flutter considerations, and provide wing-bending relief.

The preliminary design selection chart for this airplane, Fig. 2, parametrically shows the effect of thrust/weight ratio (T/W) and wing loading (W/S) on airplane gross-weight and block-fuel requirements for an otherwise fixed configuration. Performance factors and constraints, such as takeoff field length ($TOFL$), initial-cruise altitude capability ($ICAC$), and the ratio of the initial-cruise lift-coefficient capability to the lift coefficient for maximum lift/drag ratio (C_{L_R}) also are identified. The minimum gross-weight airplane required a high wing loading of approximately 140 lb/ft^2 and could not meet the $TOFL$ requirement. The minimum block-fuel air-

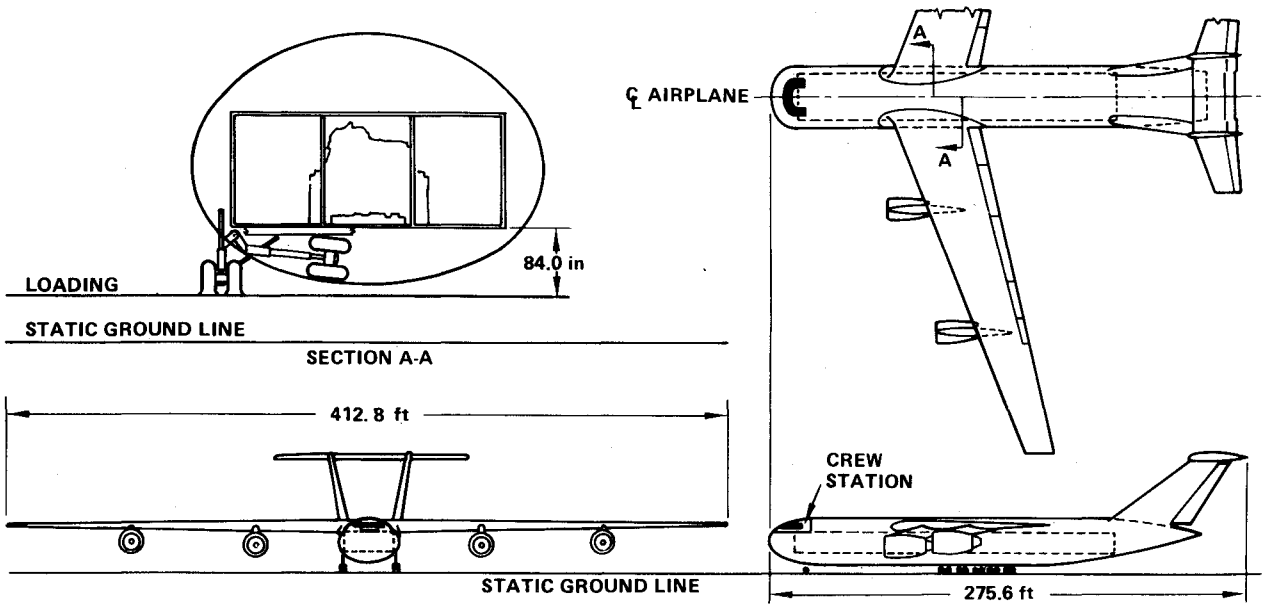

Fig. 1 Cantilever-wing configuration.

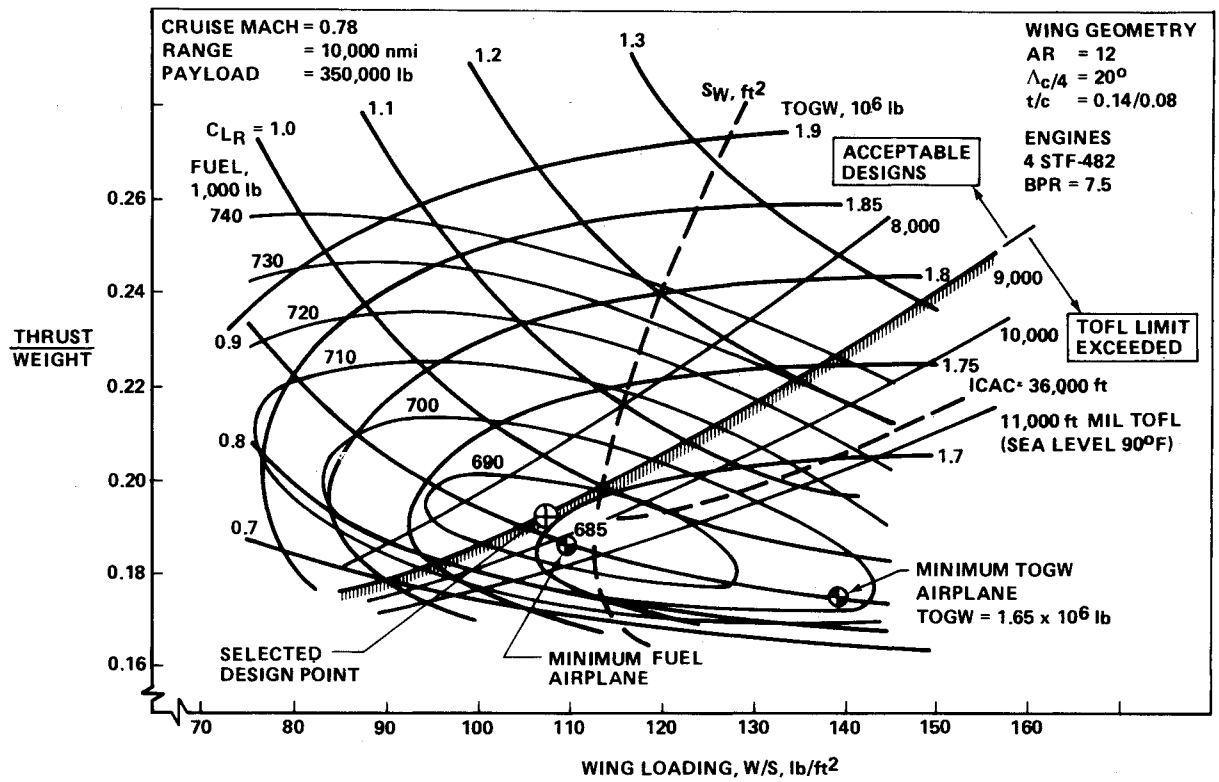

Fig. 2 Cantilever-wing airplane engine/airframe matching.

plane required a lower wing loading (110 lb/ft^2) and also did not meet the *TOFL* requirement of 9000 ft. The design was selected by considering the trade between fuel burned and gross weight along the *TOFL* = 9000-ft constraint line.[3] The selected design, which had a wing loading of 108 lb/ft^2, achieved nearly the minimum fuel and minimum gross weight possible for this configuration.

The preceding design selection provided a baseline configuration to begin the wing-geometry/cruise-speed optimization study. The technique used[5] consisted of five sequential steps. Four values of each of the primary wing variables (i.e., thickness ratio (t/c), aspect ratio (AR), and quarter chord sweep $\Lambda_{c/4}$) were defined in step 1. In step 2, the method of orthogonal Latin squares was used to define the minimum number of wing designs (16) that accurately represented the entire matrix of 64 study configurations. In step 3, each of the 16 selected designs was evaluated by the engine/airframe matching technique used to obtain Fig. 2. This process provided values of the secondary variable (i.e., wing loading, thrust-to-weight ratio, Mach number (M), and cruise altitude) that satisfy the design constraints. A forward-step regression-analysis method was used in step 4 to construct approximating functions to represent the relationship between the dependent and the independent variables. Step 5 used a powerful nonlinear optimizer on the constructed approximating functions to conduct constrained or un-

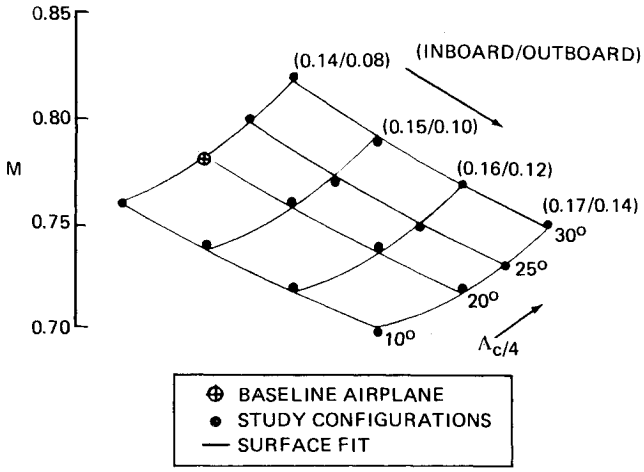

Fig. 3 Cruise Mach number.

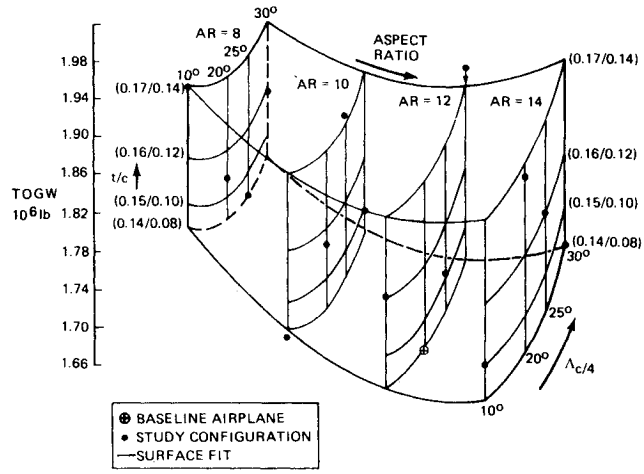

Fig. 4 Takeoff gross weight.

constrained optimization studies, sensitivity studies, and trade studies.

Results of the wing-geometry/cruise-speed optimization study illustrate the impact of wing planform geometry on the cruise Mach number (Fig. 3) and *TOGW* (Fig. 4). The surface-fit equations from the regression analysis are a good representation of the preliminary baseline configuration and the additional 15 configurations. The wing geometry (primary variables) and cruise Mach number for the resulting minimum block-fuel, minimum *TOGW*, and maximum productivity airplanes are shown in Table 1. Sensitivities of the airplanes to changes in the wing planform are also shown. Sensitivity is defined as the percentage change in the primary figure of merit relative to its minimum value (e.g., block fuel) that occurs over the entire range of values for the particular design variable.

The optimum planform for the minimum block-fuel airplane has the highest aspect ratio and the lowest sweep and thickness/chord ratio. This combination results in a cruise Mach number of 0.76. The sensitivity data show that a high aspect ratio and low thickness/chord ratio are the most important items for minimum fuel (largest sensitivity coefficients in Table 1), and sweep is of lesser importance. The sensitivity data show that gross weight varies by approximately 10% for changes in either aspect ratio, thickness/chord ratio, or wing sweep over the range of values considered.

The maximum productivity configuration has a low thickness/chord ratio and an aspect ratio of 12.7. The large sensitivity coefficient in Table 1 shows that low thickness/chord ratio is most important in achieving high productivity. Wing sweep did not significantly affect productivity, because the gross-weight variations with sweep were proportional to the Mach number changes.

Results of the wing-geometry/cruise-speed optimization showed that a wing planform with aspect ratio of 14, thickness-ratio variation of 0.14/0.08 (inboard/outboard), and sweep of 10 deg minimizes gross weight and fuel consumption. This condition was nearly the maximum productivity configuration. The wing sweep, however, could be increased to 20 deg and the aspect ratio could be reduced to 12 without significantly affecting fuel consumption, gross weight, or productivity. These changes result in an increase in cruise speed from Mach 0.76 to Mach 0.78. Additionally, the wingspan would also be reduced, and this is structurally desirable to reduce wing-tip deflections. Consequently, a near-optimum cantilever wing was selected that has the following characteristics: aspect ratio 12, quarter chord sweep 20 deg, thickness/chord ratio 0.14 inboard/0.08 outboard, and cruise Mach number 0.78.

III. Strut-Braced Wing Configuration

Strut-braced wings offer the possibility of structurally efficient large-span wings, particularly when advanced-composites structural materials are used. There has been considerable research on various strut arrangements, including multiple jury struts, by W. Pfenninger[6] in connection with laminar-flow control and turbulent airplane design. Recent Boeing wind-tunnel results[3] indicate that unfavorable aerodynamic interference between wing and strut can also be minimized by proper tailoring of the wing and/or strut, particularly near the wing/strut intersection. An interference factor of 10% was applied to the strut-isolated profile drag, and a critical Mach decrement of 0.01 was used to account for strut interference effects in the study reported herein.

The strut-braced airplane was derived from the cantilever airplane by modifying the wing planform to accommodate the strut, and resizing the aircraft to achieve identical mission

Table 1 Optimum configuration and design sensitivities

Configuration	Primary figure of merit	Change, %	Design variable range	Optimum
Minimum fuel		21.4	$AR = 8 \rightarrow 14$	14
A/P	Fuel:	19.6	$t/c = (0.14/0.08) \rightarrow (0.17/0.14)$	(0.14/0.08)
$M = 0.76$		6.7	$\Lambda_{c/4} = 10 \rightarrow 30$ deg	10 deg
Minimum *TOGW*		10.4	$AR = 8 \rightarrow 14$	14
A/P	*TOGW*:	9.8	$t/c = (0.14/0.08) \rightarrow (0.17/0.14)$	(0.14/0.08)
$M = 0.76$		9.6	$\Lambda_{c/4} = 10 \rightarrow 30$ deg	10 deg
Maximum		−5.2	$AR = 8 \rightarrow 14$	12.7
$\frac{MPL}{TOGW}$ A/P	$\frac{MPL}{TOGW}$:	−15.7	$t/c = (0.14(0.08) \rightarrow (0.17/0.14)$	(0.14/0.08)
		0	$\Lambda_{c/4} = 10 \rightarrow 30$ deg	0

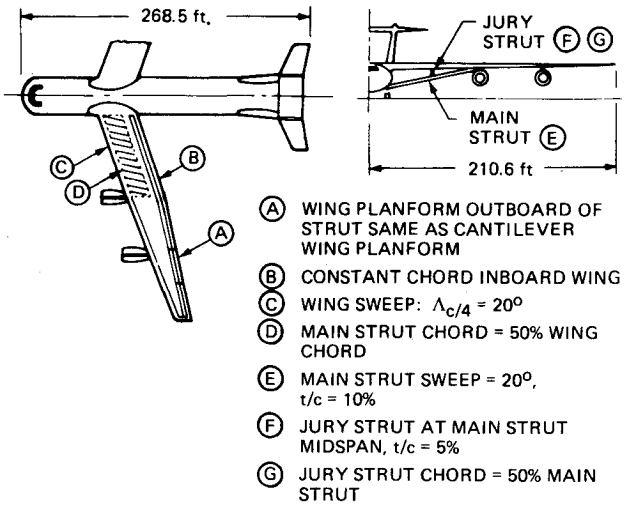

Fig. 5 Strut-braced wing-design guidelines.

performance. Design guidelines used to develop the strut-braced wing configuration are shown in Fig. 5. The strut attaches to the fuselage ahead of the foremost main landing gear, and the leading edge of the strut falls behind the leading-edge flaps at the outboard attachment station.

The shortened, constant-inboard wing chords reduced the wing area, and consequently increased the aspect ratio from 12 to 13.5. The wing-thickness/chord definition was the same as on the reference cantilever wing (14% inboard, 8% outboard). However, the braced wing was thinner inboard due to the reduced wing chords. The combination of strut-attachment angle and side-of-body wing/strut spacing resulted in a strut attachment at approximately 45% wing semispan. The inboard engine was located at the strut-attachment station to provide a wing/strut separation distance of 20 in., and the outboard engine location was unchanged relative to the cantilever-wing location. The leading-edge and trailing-edge flaps, spoilers, etc., were constant length inboard of the strut-attachment station.

Preliminary structural analyses of the strut-braced wing indicated the desirability of a jury strut. Consequently, the final strut-braced wing definition included a 5%-thick jury strut located at midspan of the main strut with chord one-half that of the main strut chord. The general arrangement of the strut-braced wing configuration is shown in Fig. 5.

The design selection chart for this configuration is shown in Fig. 6. The minimum gross-weight configuration would require a wing loading of 140 lb/ft^2, while the design wing loading for minimum fuel was less than 110 lb/ft^2. Neither configuration met the *TOFL* requirement. The final design selection for the strut-braced wing configuration had a wing loading of 120 lb/ft^2. It is the *TOFL*-constrained minimum *TOGW* configuration, and achieves nearly the minimum fuel requirements.[3]

IV. Wing Structural Analyses

The preceding cantilever and strut-braced wing airplanes were sized and optimized initially, using weights calculated by statistical weights-estimation techniques. Detailed structural analyses were then made of the cantilever wing (with inboard/outboard thickness/chord ratios of 0.14/0.08, 0.15/0.10, and 0.16/0.12) and the strut-braced wing, to provide analytical wing weights and an understanding of the elastic characteristics of very large-span wings. Flutter evaluations were not included. Although large deflections were anticipated, the wings were strength-sized, and the wing deflections were noted for comparative evaluations.

The basic structural material is 350 cure T300 graphite/epoxy, assumed to be 1985 technology-available for inservice in the mid-1990 time period.

A computerized wing structural synthesis program, ORACLE, that combined an aerodynamic loads analysis, a simplified box-beam stress analysis, and a weight analysis of the wing box provided definition of the wing material requirements necessary for the analytical weight evaluations of the cantilever, and strut-braced wing planforms. These

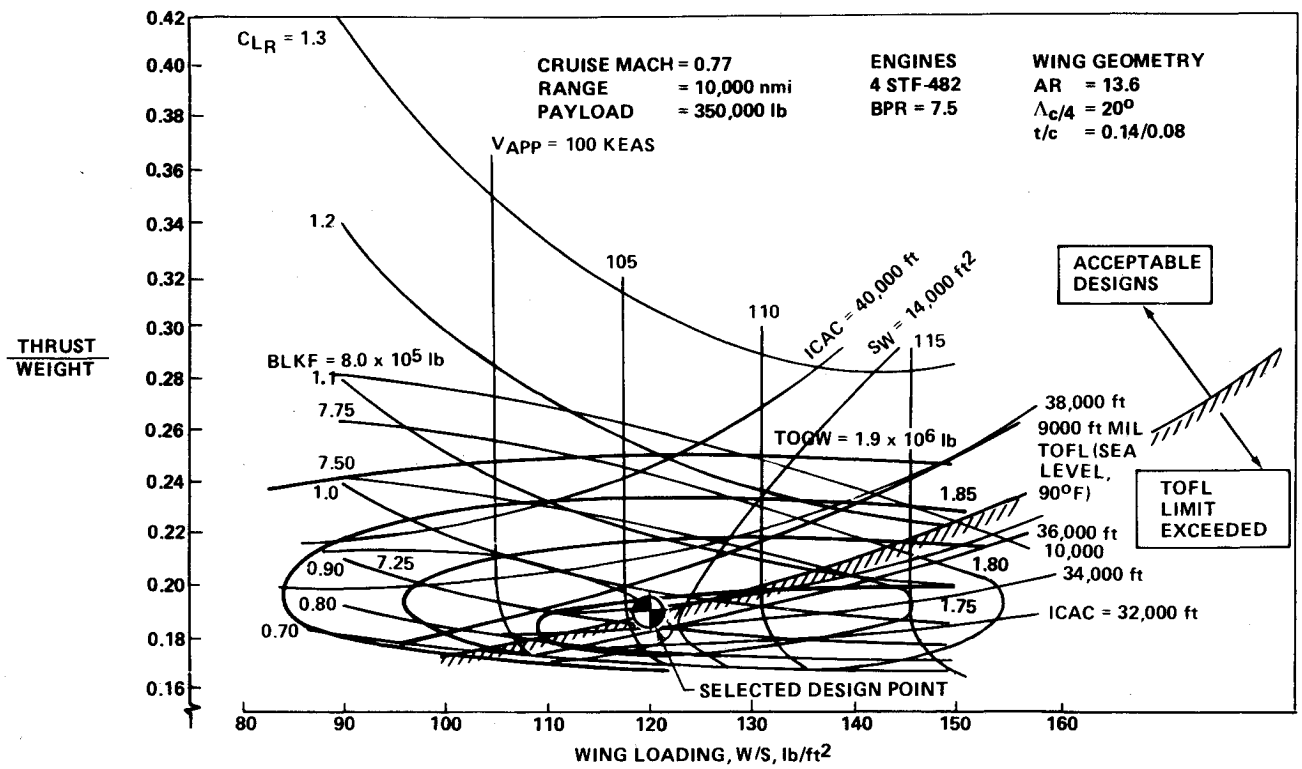

Fig. 6 Strut-braced wing airplane engine/airframe matching.

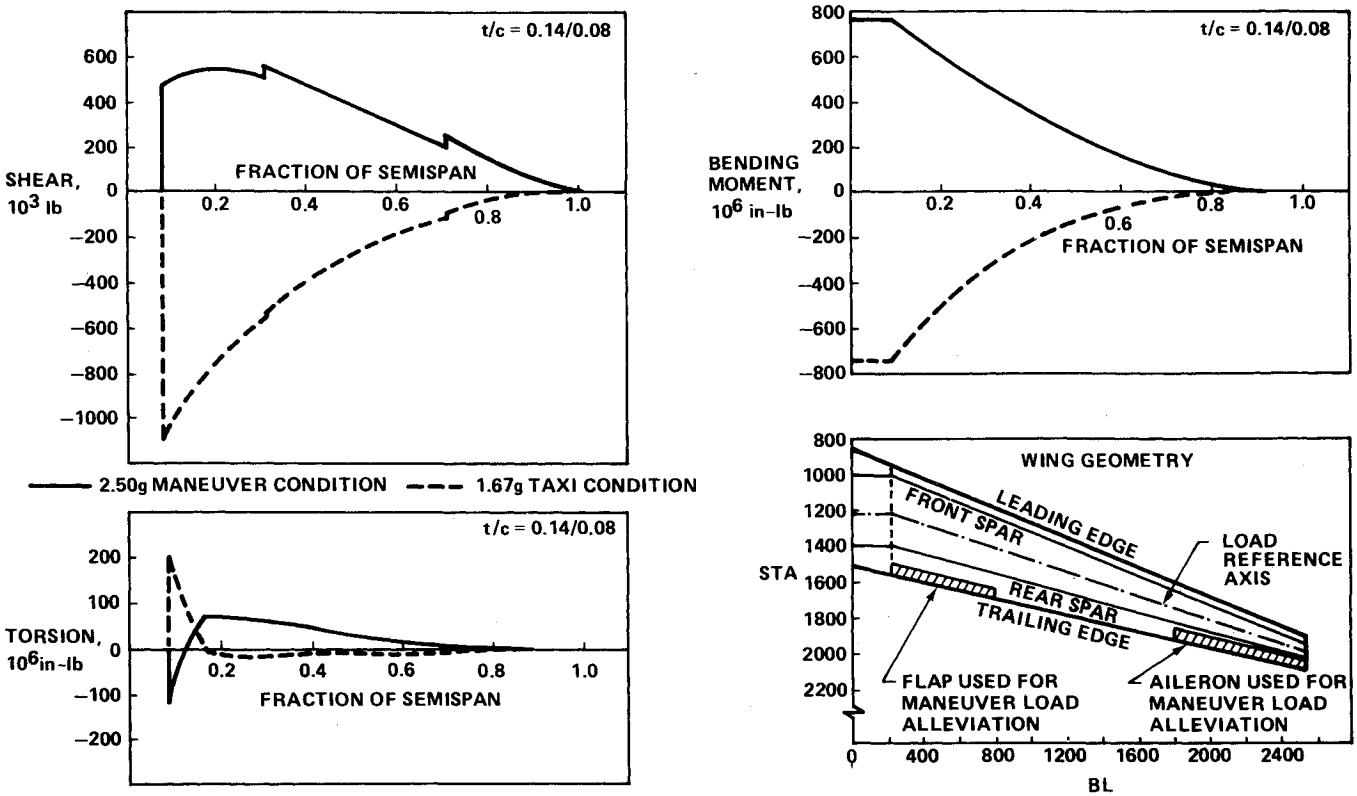

Fig. 7 Cantilever-wing structural analyses.

theoretical evaluations of the wing primary structure, plus statistical evaluations of the secondary structural weight items, comprised the analytical weight evaluations of the large-span wings. The weight analysis procedure is described in Ref. 7.

The locations of spars and the load reference axis used for all of the cantilever wings are shown in plain view in Fig. 7. All of the wings were sized by the 2.5-g maneuver condition and the 1.67-g taxi condition. The differences in wing-thickness distributions of the cantilever wings had little effect on the design loads, shown for the thinnest wing in Fig. 7.

The effects of active controls were estimated and included in the wing-load calculations. Gust load alleviation was estimated to produce a 15% reduction in the incremental gust load factor, and was simulated by an appropriate reduction in dynamic gust factor. Maneuver load alleviation (*MLA*) was investigated by deflecting either an outboard aileron with the trailing edge up, or an inboard flap with the trailing edge down, to shift wing-lift loading inboard and thereby reduce the wing root-bending moment. When the ailerons were deflected, the flexible wings tended to wash in at the tips, thereby shifting the wing lift outboard. Use of the ailerons actually produced an undesirable increase in root-bending moment. When the inboard flaps were deflected, the lift loading shifted inboard, producing a desired reduction in root-bending moment. An *MLA* system using the inboard flaps provided a wing-weight saving for the study configurations.

Results of the wing-weight evaluations, based on structural analyses, are shown in Fig. 8 as weights relative to the statistical weight evaluations of the cantilever wing, with $t/c = 0.14/0.08$. The statistical weight analyses underpredicted the wing weights, particularly for the thinner wings. The effects of wing thickness on wing weight as predicted by the analytical and the statistical methods are, however, similar.

The strut-braced wing was structurally analyzed by an iterative procedure. Initially, an equivalent stiffness was assumed for the portion of the wing supported by the main strut/jury strut arrangement. The beam-analysis program, ORACLE, was then used to calculate the aeroelastic loads and deflections of the "equivalent" cantilever-wing representation of the strut-braced wing. The initial aeroelastic loads and estimated stiffness were then imposed on a finite-element model of the wing and strut geometry. The finite-element model provided the distribution of the loads between the strut and wing, and the corresponding internal loads. The inboard wing and strut were resized, based on the internal loads from the finite-element program, and new stiffnesses were incorporated into the modeling of the wing. Iteration was concluded when the wing and strut loads, deflections, and stiffnesses sufficiently converged.

The strut-braced wing-spar locations and design loads are shown in Fig. 9. Note that, by comparison with Fig. 7, the shear load has a reduced maximum value and reverses direction inboard of the strut, the maximum bending moment is reduced by one-half, and the peaks in torsion at the side-of-body juncture have been removed.

Vertical deflections of the cantilever wings and the strut-braced wings are shown in Fig. 10 at taxi, cruise, and maneuver conditions. These results indicate an area of concern in the taxi condition, where the tip and/or outboard

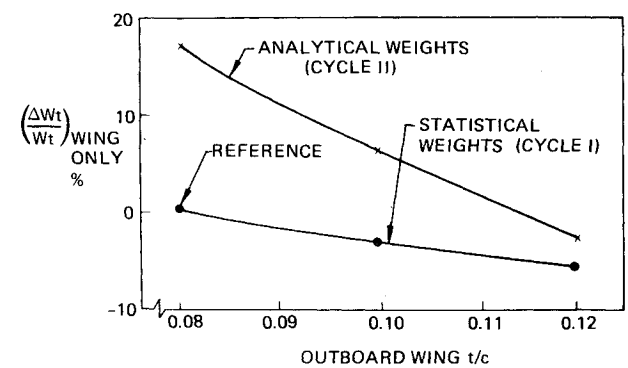

Fig. 8 Cantilever-wing weight estimates.

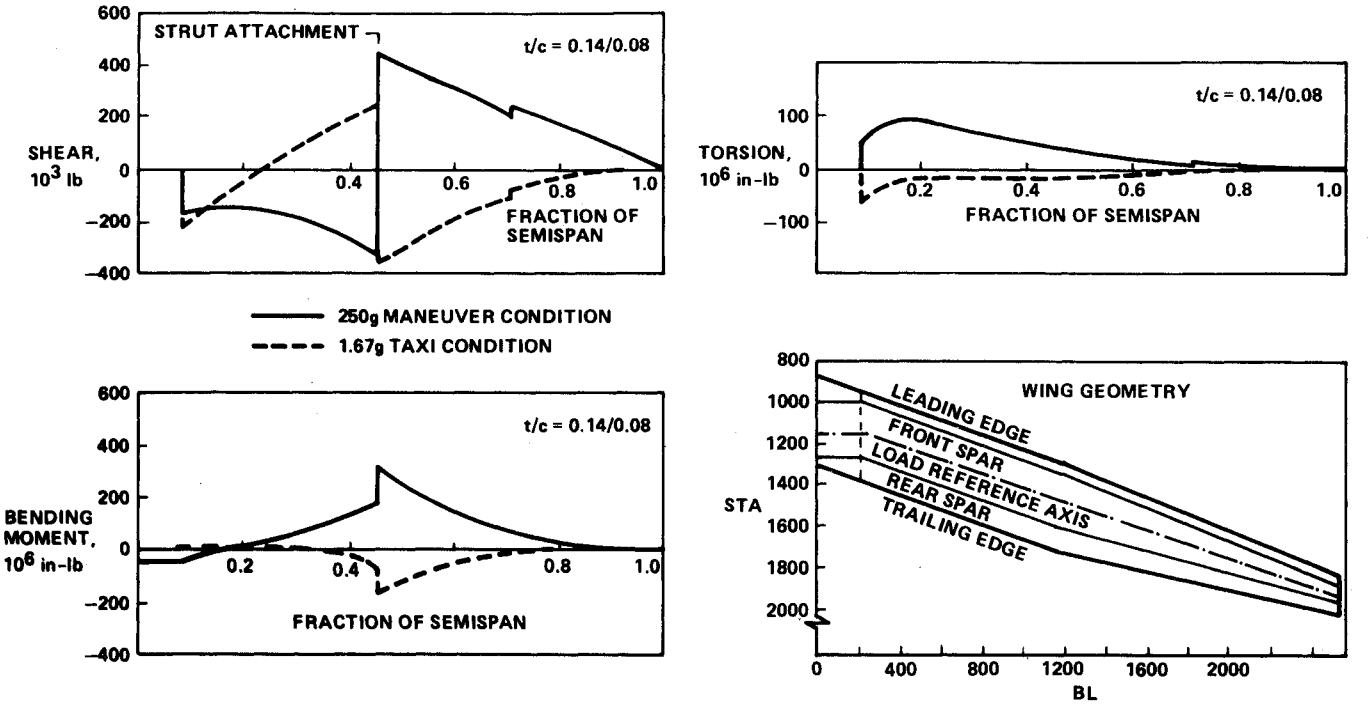

Fig. 9 Strut-braced wing structural analyses.

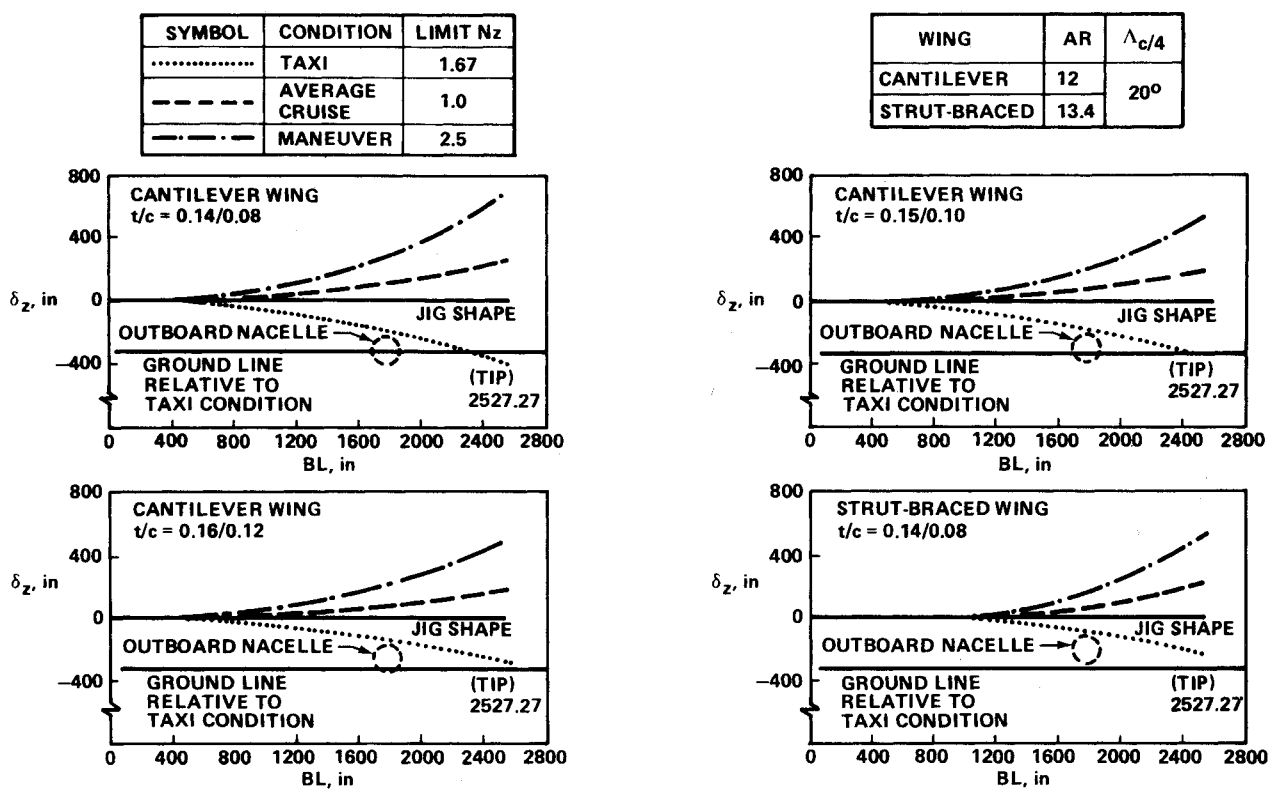

Fig. 10 Large-span wing deflections.

nacelle could strike the ground. Increased wing thickness alleviates but does not cure this problem. Additional design modifications and studies would be necessary to define the most desirable solution. The strut-braced wing concept eliminated taxi deflection concerns of all the large-span wings that were considered.

The impact of the differences in wing weights estimated by statistical methods and by analytical methods on the fuel consumption, empty weight, and gross weight of the study airplane is discussed in Sec. V.

V. Weight and Performance Comparisons

Weight of the large-span wings was a major area of uncertainty, due to the use of advanced-composites materials, projected use of load-relieving devices, extrapolation of the weights data base, etc. Consequently, sensitivity studies were made to determine the effects of variations of wing weight on the gross-weight, fuel-consumption, and size characteristics of the cantilever-wing and strut-braced wing configurations. Results are shown in Table 2 as sensitivities expressed as percentage change in fuel, gross weight, etc. for a 10% change

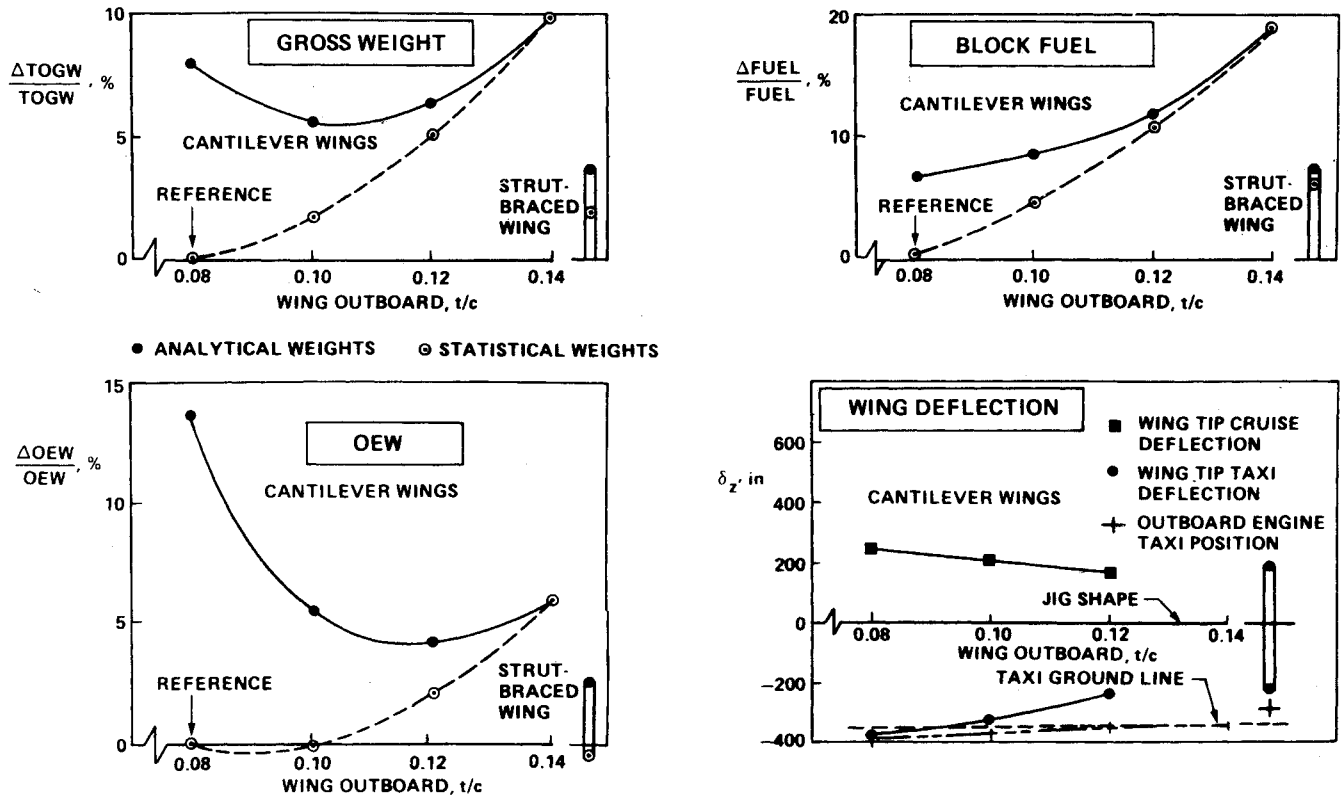

Fig. 11 Large-span wing comparisons.

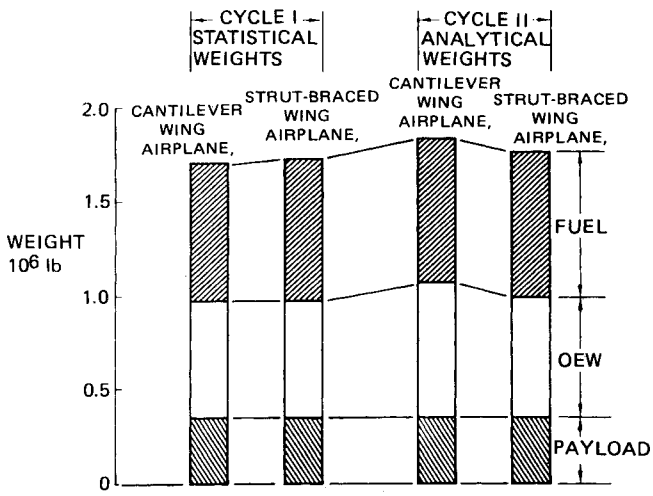

Fig. 12 Gross-weight comparison.

Table 2 Airplane sensitivities to wing-weight variations

Quantity	Percent change for a 10% increase in wing weight: Cantilever-wing airplane $AR=12$ $t/c=0.14/0.08$	Strut-braced wing airplane $AR=12$ $t/c=0.14/0.08$
Empty weight:		
uncycled	3.3	3.2
cycled	7.3	6.3
Gross-weight	4.2	3.4
Fuel burned	3.4	2.6
Thrust required	4.1	3.4
Wing area	4.2	3.5

in base wing weight. A 10% variation in base wing weight changed fuel consumption and gross weight of the airplanes by approximately 4%. The strut-braced wing airplane was less sensitive to wing-weight variations in all cases, because the wing was a smaller percentage of the *TOGW* (13.1% for the cantilever vs 12.5% for the strut-braced).

Detailed structural analyses were used to develop analytical weight estimates of the cantilever wing and the strut-braced wing. The analytical weight data provide a basis for assessing the accuracy of the statistical weight data commonly used for preliminary-design tradeoff studies. The cantilever-wing configuration and the strut-braced wing configuration were then resized with the wing weights determined by the structural analyses. Additional structural analyses were made to determine the effect of wing-thickness distribution on wing weight. Effects of wing thickness on the gross weight, fuel consumption, and operational empty weight (*OEW*) of the cantilever-wing configuration are shown in Fig. 11. Statistical weights indicate that the 0.14/0.08 thickness/chord distribution minimizes fuel burned, *OEW*, and gross weight. Results of the analytical weights evaluation showed that the weight of the thinnest cantilever wing was 18% heavier than indicated by the statistical weights, while the weights estimated for the thickest cantilever wing were nearly equal (Fig. 8). Consequently, results obtained with the analytical weights indicated that minimum block-fuel consumption is still obtained with the thin wing. However, thicker wings are required to minimize operational empty weight and gross weight. The minimum *TOGW* is achieved by increasing the wing thickness ratio to 0.15/0.10. This increase reduces the cruise speed to $M=0.76$. A further increase to $t/c=0.16/0.12$ is required to minimize empty weight, and the cruise Mach number for this thickness would be further reduced to $M=0.74$.

Analytical weight evaluations of the strut-braced wing indicated that the wing weight was higher than had been predicted by the statistical weights, but the relative weight increase was not as great as for the comparable-thickness (0.14/0.08) cantilever wing. Hence, the more accurate analytical weights showed that the strut-braced wing airplane required 1.6% less fuel, 1.8% less gross weight, and 3% less empty weight than the cantilever-wing airplane with the best

wing-thickness distribution of 0.15/0.10. Figure 11 also emphasizes that the strut-braced wing is effective in reducing wing taxi deflections to an acceptable level.

Bar chart comparisons of the configuration gross weights are shown in Fig. 12. Initial comparisons based on parametric statistical weights indicate that the gross weight of the cantilever-wing airplane is slightly less than that of the strut-braced wing airplane. Airplane evaluations using weights based on detailed structural analyses, however, indicate that the strut-braced configuration has approximately 4% less gross weight than the cantilever configuration.

Economic analyses were made to determine the 20-yr life-cycle costs (112 unit-equipped airplanes operating 1,080 h each) and surge condition (10 flying h per airplane per day for 60 days) operating costs. Production costs are the major portion of life-cycle costs (40%), while fuel costs are a relatively small portion (15%), because of the low utilization rate. For the surge-condition utilization rate, fuel costs comprise over 50% of operating costs. Cost comparisons based on the statistical weights indicate that operating costs and life-cycle costs of the cantilever-wing configuration are slightly less than for the strut-braced configuration. The analytical weight evaluations indicate that the gross weights of the strut-braced wing configurations are less than those of the cantilever-wing configuration and, since cost is based on weight, the operating and life-cycle costs of the strut-braced configuration would actually be the smaller. However, to fully determine the performance and economic potential of the strut-braced wing configuration, coordinated detailed structural and aerodynamic studies are necessary.

The conclusions that apply to very long-range, high-payload military transport airplanes of relatively low utilization are given below:

1) Structural analyses indicated that very large-span cantilever wings experience unacceptable deflections. Increasing the wing thickness reduced the taxi-condition deflections at the expense of increased fuel requirements and reduced cruise speed. The strut-braced wing design reduced taxi deflections to acceptable levels.

2) Based on analytical (structural analyses) weights, and projected improvements in wing/strut aerodynamic designs, the strut-braced wing offered the potential of lower *TOGW*, *OEW*, and fuel consumption.

3) Additional detailed structural and aerodynamic design, analyses, and testing are required to define optimum geometries and design limitations of very large-span wings.

References

[1] Kulfan, R.M. and Howard, W.M., "Application of Advanced Aerodynamic Concepts to Large Subsonic Transport Airplanes," AFFDL TR-75-112, 1975.

[2] Kulfan, R.M. and Vachal, J.D., "Application of Laminar-Flow Control to Large Subsonic Military Transport Airplanes," AFFDL TR-77-65, 1977.

[3] Kulfan, R.M. and Vachal, J.D., "Wing Planform Geometry Effects on Large Subsonic Military Transport Airplanes," AFFDL TR-78-16, 1978.

[4] Jobe, C.E., Kulfan, R.M., and Vachal, J.D., "Application of Laminar-Flow Control to Large Subsonic Military Transport Airplanes," *Journal of Aircraft*, Vol. 16, March 1979, pp. 170-176.

[5] Eckard, G.J. and Healy, M.J., "ARES User Guide," Boeing Document D180-22963-1, March 1978.

[6] Pfenninger, W., "Laminar-Flow Control, Laminarization," Paper 3 in Special Course on Concepts for Drag Reduction AGARD-R-654, 1978.

[7] Anderson, R.L. and Giridharadas, B., "Wing Aeroelastic Structural Analysis Applied to the Study of Fuel-Conserving CTOL Transports," SAWE Paper 1040, May 1975.

From the AIAA Progress in Astronautics and Aeronautics Series . . .

INSTRUMENTATION FOR AIRBREATHING PROPULSION—v. 34

Edited by Allen Fuhs, Naval Postgraduate School, and Marshall Kingery, Arnold Engineering Development Center

This volume presents thirty-nine studies in advanced instrumentation for turbojet engines, covering measurement and monitoring of internal inlet flow, compressor internal aerodynamics, turbojet, ramjet, and composite combustors, turbines, propulsion controls, and engine condition monitoring. Includes applications of techniques of holography, laser velocimetry, Raman scattering, fluorescence, and ultrasonics, in addition to refinements of existing techniques.

Both inflight and research instrumentation requirements are considered in evaluating what to measure and how to measure it. Critical new parameters for engine controls must be measured with improved instrumentation. Inlet flow monitoring covers transducers, test requirements, dynamic distortion, and advanced instrumentation applications. Compressor studies examine both basic phenomena and dynamic flow, with special monitoring parameters.

Combustor applications review the state-of-the-art, proposing flowfield diagnosis and holography to monitor jets, nozzles, droplets, sprays, and particle combustion. Turbine monitoring, propulsion control sensing and pyrometry, and total engine condition monitoring, with cost factors, conclude the coverage.

547 pp. 6 x 9, illus. $14.00 Mem. $20.00 List

TO ORDER WRITE: Publications Dept., AIAA, 1290 Avenue of the Americas, New York, N. Y. 10019